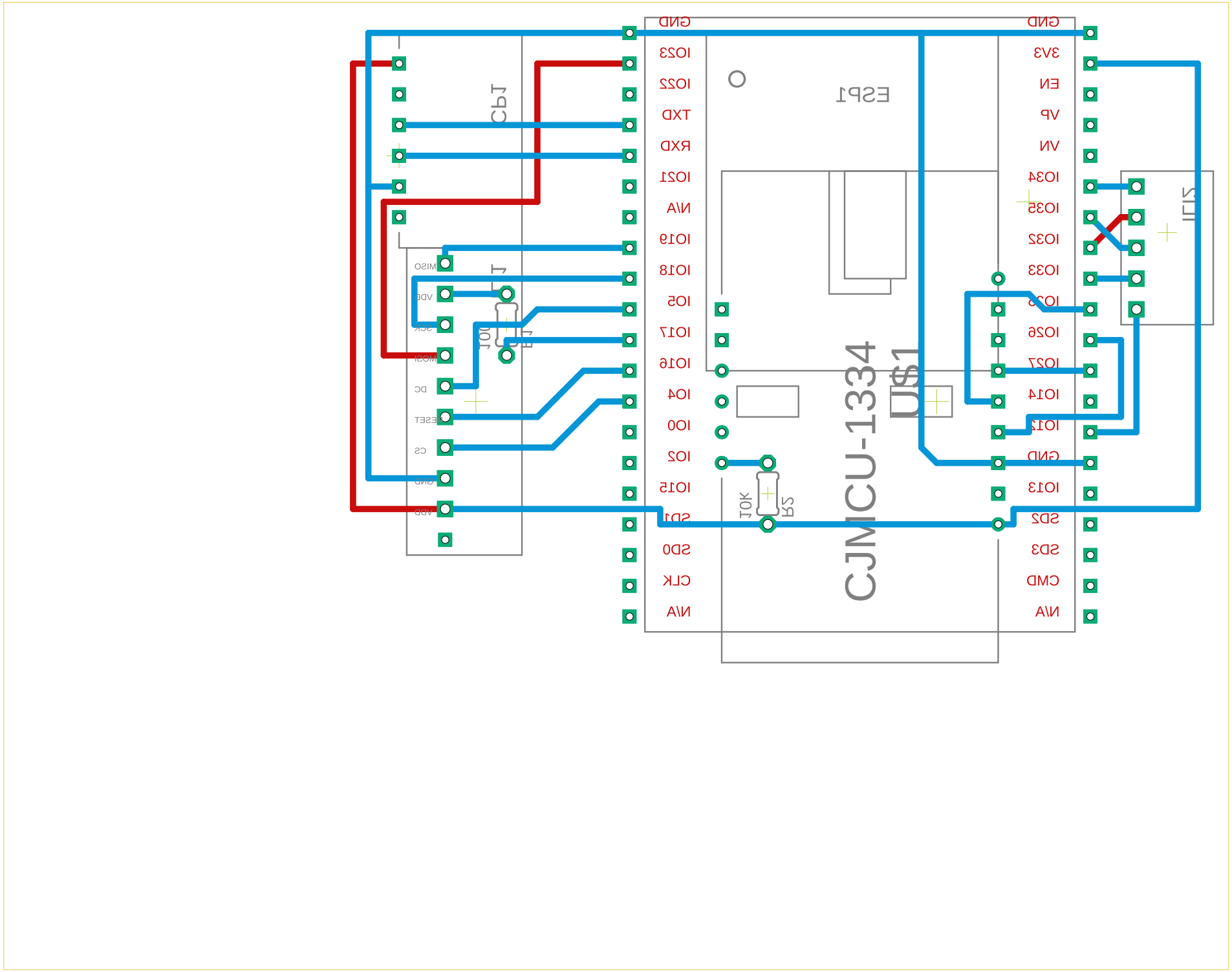

17.08.2020 08:38 f=2.47 mirrored D:__Dokus\Documents\PlatformIO\ESP32\ESP32-Radio-I2S\Eagle\InternetRadio.brd